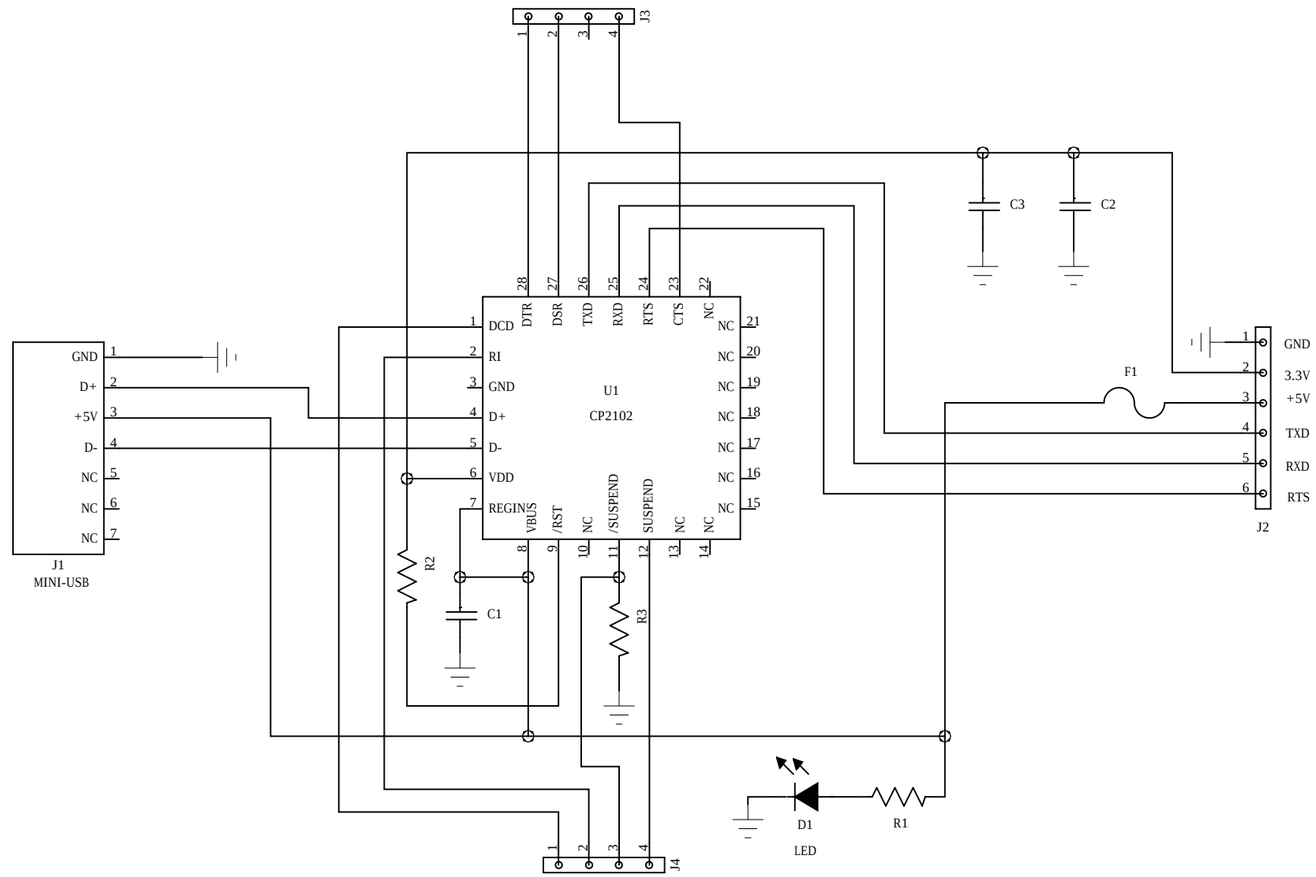
J3
1
2
3
4
C3
C2
U1
CP2102
DCD
RI
GND
D+
D-
VDD
REGIN
VBUS
/RST
NC
/SUSPEND
SUSPEND
DTR
DSR
TXD
RXD
RTS
CTS
J1
MINI-USB
GND
D+
+5V
D-
NC
R2
C1
R3
F1
J2
GND
3.3V
+5V
TXD
RXD
RTS
D1
LED
R1
J4